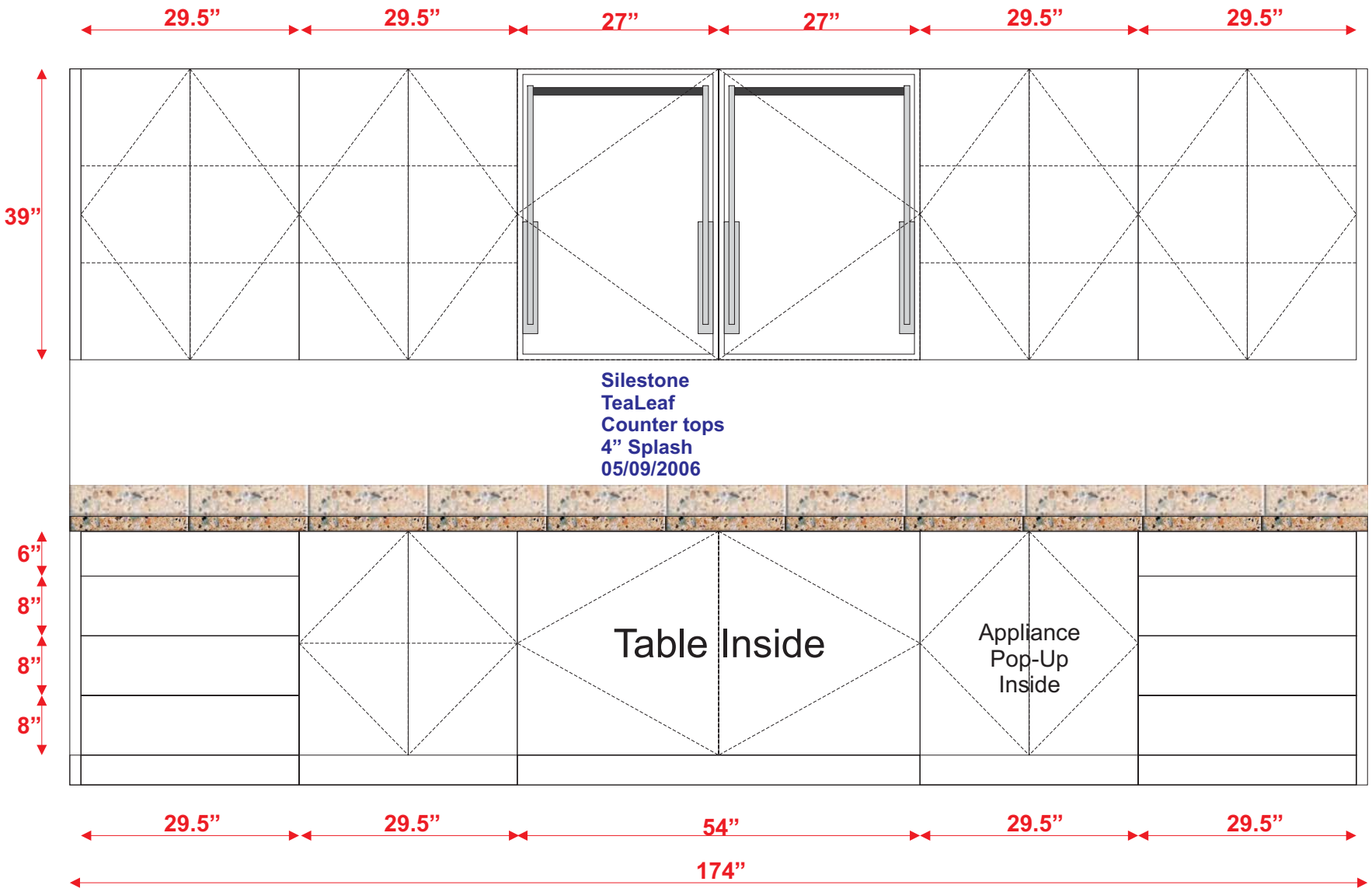
29.5”
29.5”
27”
27”
29.5”
29.5”
39”
Silestone
TeaLeaf
Counter tops
4” Splash
05/09/2006
6”
8”
8”
8”
Table Inside
Appliance
Pop-Up
Inside
29.5”
29.5”
54”
29.5”
29.5”
174”

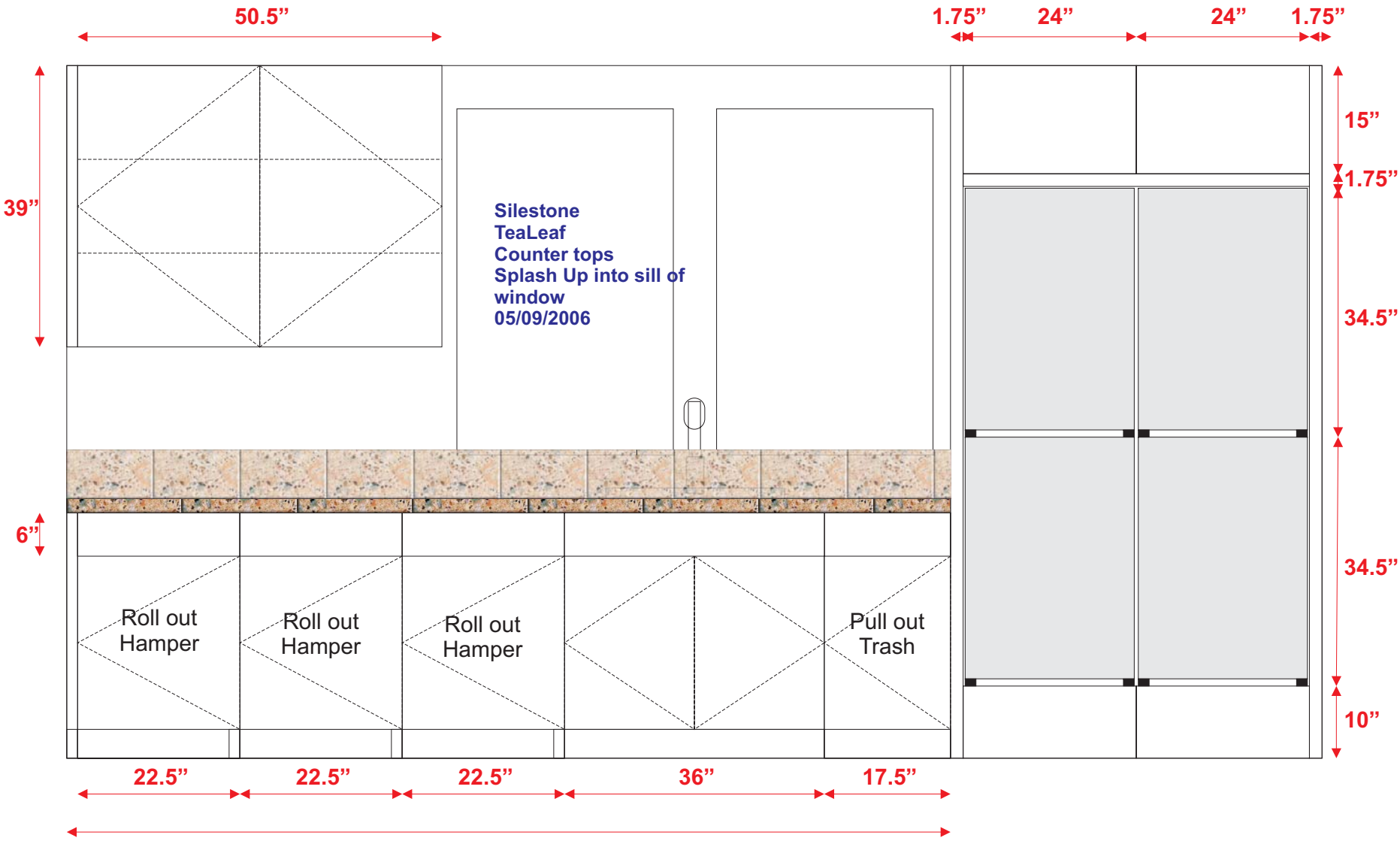
50.5”
1.75”
24”
24”
1.75”
39”
15”
1.75”
34.5”
34.5”
10”
6”
Silestone
TeaLeaf
Counter tops
Splash Up into sill of
window
05/09/2006
Roll out
Hamper
Roll out
Hamper
Roll out
Hamper
Pull out
Trash
22.5”
22.5”
22.5”
36”
17.5”

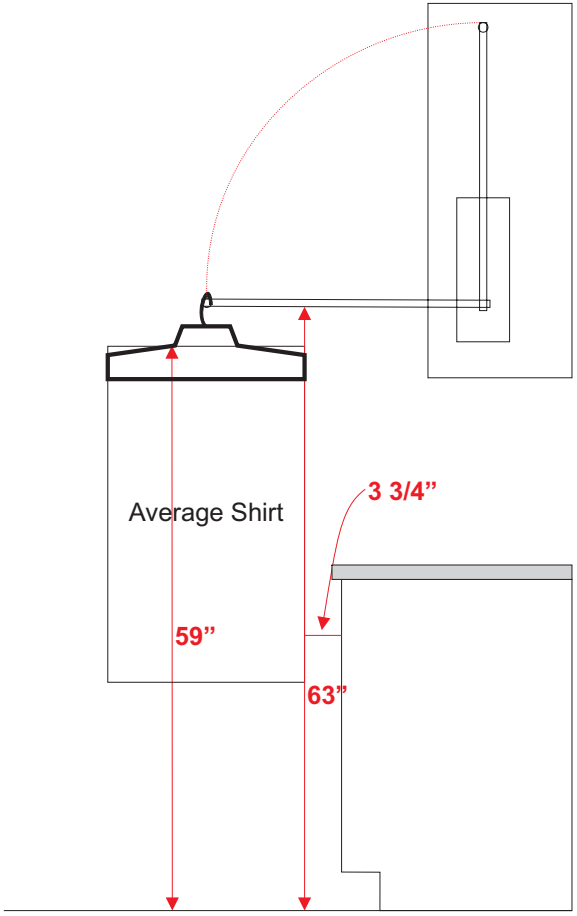
Average Shirt
3 3/4”
59”
63”